OVERVIEW

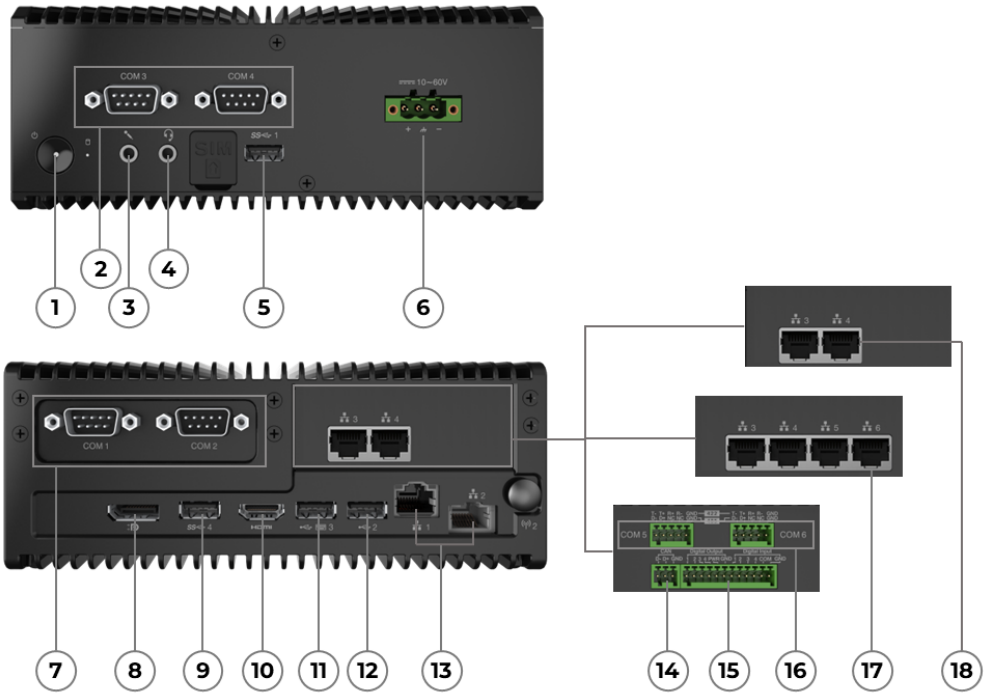

1. Power button	10. HDMI
2. 2x Serial (RS232) *	11. USB 2.0
3. Microphone jack (3.5mm)	12. USB 2.0
4. Headphone / microphone combo jack (3.5mm)	13. 2x Ethernet (RJ-45)
5. USB 3.2 Gen 1	14. CAN BUS on industry card *
6. Power connector	15. DIO (4DIx4DO) on industry card *
7. 2x Serial (RS232)	16. 2x Serial (RS422 / RS485) on industry card *
8. DisplayPort	17. 4x Ethernet (RJ-45) *
9. USB 3.2 Gen 1	18. 2x Ethernet (RJ-45) *

Notes:
- Items with * are only available on selected models

PERFORMANCE

Processor

Processor Family

8th Generation Intel Core™ i5 / i7 Processor

Processor**

Processor Name	Cores	Threads	Base Frequency	Max Frequency	Cache	Memory Support	Processor Graphics
Core i5-8365UE	4	8	1.6GHz	4.1GHz	6MB	DDR4-2400	Intel® UHD Graphics 620
Core i7-8665UE	4	8	1.7GHz	4.4GHz	8MB	DDR4-2400	Intel® UHD Graphics 620

Operating System

Operating System**

- Windows® 11 IoT Enterprise LTSC 2024
- Windows® 10 IoT Enterprise LTSC 2019
- Ubuntu Core 20 64 Bit (kernel 5.4)
- Ubuntu (Server) 20.04 LTS 64 Bit (kernel 5.4)
- No preload operating system

Graphics

Graphics

Graphics	Type	Memory	Max Resolution	Connector	Key Features
Intel® UHD graphics	Integrated	Shared	4096x2304@30Hz(HDMI®), 4096x2304@60Hz(DP)	1x HDMI®, 1x DP	DirectX® 12

Monitor Support

Monitor Support

Supports up to 2 independent displays via onboard ports (DisplayPort™ and HDMI®)

Chipset

Chipset

Intel® SoC (System on Chip) platform

Memory

Max Memory

Up to 64GB DDR4-2400

Memory Slots

Two DDR4 SODIMM slots, dual-channel capable

Memory Type[1]

DDR4-2400

Memory Protection

Non-ECC

Notes:

[1] Installed memory is actually DDR4-2666 but runs as DDR4-2400 due to the memory support capability of processor.

Storage

Max Storage Support[1]

Up to two drives, 1x 2.5″ HDD/SSD + 1x M.2 SSD
• 2.5″ SSD up to 256GB
• M.2 SSD up to 2TB

Storage Type***[2]

Disk Type	Interface	RPM	Security

2.5″ SATA HDD	SATA 6Gb/s	5.4K	-
2.5″ SATA HDD	SATA 6Gb/s	7.2K	-
2.5″ SATA SSD	SATA 6Gb/s	-	-
M.2 2242 SSD	PCIe® NVMe®, PCIe® 3.0 x2	-	-
M.2 2280 SSD	PCIe® NVMe®, PCIe® 3.0 x4	-	Opal
M.2 2280 SSD	PCIe® NVMe®, PCIe® 4.0 x4	-	Opal 2.0

Notes:

[1] 2.5″ HDD and 2.5″ SATA SSD are EOL
[2] From June 2025, only M.2 2242 and M.2 2280 SSDs are available to choose

Power Supply

Power Supply

Power	Type	Efficiency	Key Features	Dimensions
65W	Adapter	89%	100-240V	129 x 53 x 30 mm, 1800 mm cable
No power adapter	-	-	-	-

DESIGN

Input Device

Keyboard

- Lenovo® Calliope Keyboard (USB connector), black
- No keyboard

Mouse

- Lenovo® Calliope Mouse (USB connector), black
- No mouse

Mechanical

Dimensions (WxDxH)[1]

179 x 182.9 x 72 mm (7.05 x 7.20 x 2.83 inches)

Packaging Dimensions (WxDxH)

490 x 170 x 260 mm (19.3 x 6.7 x 10.2 inches)

Weight[2]

Around 2.985 kg (6.58 lbs)

Packaging Weight

Around 0.55 kg (1.21 lbs)

Case Color

Black

EOU

No support

Mounting**

- Supports VESA mount 75mm and 100mm
- (Optional) ThinkEdge™ DIN rail mount kits
- (Optional) Flat head screw for VESA mount

Others

(Optional) Dust filter

Notes:

[1] The system dimensions may vary depending on configurations.
[2] The system weight is approximate and based on results in Lenovo® lab, which varies depending on the source of component, variance of the distribution of each component, and manufacturing process. It may not be the exact weight

for each specific model.

CONNECTIVITY

Network

Ethernet

Gigabit Ethernet, Realtek® RTL8119i, 2x RJ-45, supports Wake-on-LAN

Optional Ethernet**

- Gigabit Ethernet, Intel® Ethernet Server Adapter I350-T2, 2x RJ-45, PCIe® card
- Gigabit Ethernet, Intel® Ethernet Server Adapter I350-T4, 4x RJ-45, PCIe® card
- No optional Ethernet

WLAN + Bluetooth®**[1][2]

- Realtek® RTL8821CE, Wi-Fi® 5, 802.11ac Dual Band 1x1 Wi-Fi® + Bluetooth® 4.2, M.2 card[3]
- Realtek® RTL8822BE, Wi-Fi® 5, 802.11ac Dual Band 2x2 Wi-Fi® + Bluetooth® 4.2, M.2 card[4]
- Realtek® RTL8822CE, Wi-Fi® 5, 802.11ac Dual Band 2x2 Wi-Fi® + Bluetooth® 5.0, M.2 card[5]
- Intel® Dual Band Wireless-AC 3165, Wi-Fi® 5, 802.11ac Dual Band 1x1 Wi-Fi® + Bluetooth® 4.2, M.2 card[6]
- Intel® Dual Band Wireless-AC 8265, Wi-Fi® 5, 802.11ac Dual Band 2x2 Wi-Fi® + Bluetooth® 4.2, M.2 card[7]
- Intel® Wireless-AC 9560, Wi-Fi® 5, 802.11ac Dual Band 2x2 Wi-Fi® + Bluetooth® 5.1, M.2 card
- No WLAN and Bluetooth®

Notes:

[1] Wi-Fi® operation (including Wi-Fi® 6, Wi-Fi® 6E, Wi-Fi® 7, etc.) is subject to the regulatory requirements of each country. Bluetooth® may operate at a lower version than hardware design depending on the factors such as operating system, driver, etc.

[2] From June 2025, only Intel® Wireless-AC 9560 is available to choose

[3], [4], [5], [6], [7] Realtek® RTL8821CE, Realtek® RTL8822BE, Intel® Dual Band Wireless-AC 3165, Intel® Dual Band Wireless-AC 8265 are EOL

Ports[1]

Front Ports

- 1x USB 3.2 Gen 1
- 1x headphone (3.5mm)
- 1x headphone / microphone combo jack (3.5mm)
- 1x power connector

Optional Front Ports

- 2x serial (RS232) on industry card
- None

Rear Ports

- 1x HDMI®
- 1x DisplayPort™
- 1x USB 3.2 Gen 1
- 2x Ethernet (RJ-45)
- 2x USB 2.0
- 2x serial (RS232)

Optional Rear Ports*

- 1x parallel (external USB to parallel dongle)
- 2x serial (RS422 / RS485) on industry card
- 1x CAN BUS on industry card
- 1x DIO (4DI / 4DO) on industry card

Notes:

[1] The transfer speed of following ports will vary and, depending on many factors, such as the processing speed of the host device, file attributes and other factors related to system configuration and your operating environment, will be slower than theoretical speed.
USB 2.0: 480 Mbit/s;
USB 3.2 Gen 1 (SuperSpeed USB 5Gbps, formerly USB 3.0 / USB 3.1 Gen 1): 5 Gbit/s;
USB 3.2 Gen 2 (SuperSpeed USB 10Gbps, formerly USB 3.1 Gen 2): 10 Gbit/s;
USB4® 20Gbps / USB 3.2 Gen 2x2 (SuperSpeed USB 20Gbps): 20 Gbit/s;

USB4® 40Gbps (USB 40Gbps): 40 Gbit/s;
Thunderbolt™ 3/4: 40 Gbit/s.
Thunderbolt™ 5: 80 Gbit/s (bidirectional), up to 120 Gbit/s in bandwidth boost mode for video-intensive applications.

SECURITY & PRIVACY

Security

Security Chip

Discrete TPM 2.0, TCG certified

SERVICE

Warranty[1]

Base Warranty**

- 1-year courier or carry-in service
- 1-year limited onsite service
- 3-year limited onsite service
- No base warranty

Notes:

[1] The warranty upgrades may be bundled with some models, please check the "Included upgrade" column in the specific model's configurations. For more service extensions, please go to https://smartfind.lenovo.com/. To learn more details of warranty policy, please access https://support.lenovo.com/warrantylookup/warrantypolicy.

ACCESSORIES

Bundled Accessories

Bundled Accessories***

- DP to HDMI® dongle
- DP to VGA cable (1.5m)
- DP to VGA dongle
- IP50 dust cover kits
- None

OPERATING REQUIREMENTS

Operating Environment[1]

Temperature

- Operating: IEC60068-2-1 Test A: Cold, IEC 60068-2-2 Test B: Dry heat, 0~50°C, with airflow 0.7m/s (for wide temperature models)
- Storage: IEC60068-2-1 Test A: Cold, IEC 60068-2-2 Test B: Dry heat, -40°C (-40°F) to 85°C (185°F)

Relative Humidity

- Relative humidity operating: IEC 60068-2-66 Damp heat, steady state 95%@40°C non-condensing
- Relative humidity storage: IEC 60068-2-66 Damp heat, steady state 90%@60°C

Shock Protection

IEC 60068-2-27, shock, operating, 30G / 11ms, half sine

Vibration Protection

IEC 60068-2-64, Vibration, Operating, 3Grms, random, 5 ~ 500Hz, 1hr/axis

HALT

HALT testing methodology, LOL / UOL depends on real test result

Notes:

[1] The environmental specifications information is only for wide temperature models (SSD + Non-WLAN or SSD + Intel® WLAN).

CERTIFICATIONS

Green Certifications

Green Certifications

- Low Halogen
- REACH
- RoHS compliant
- TED (The ECO-declaration)
- WEEE

Other Certifications

EMC

- EMC CE / FCC / ICES Class A
- RCM
- VCCI
- BSMI

Safety

- CE for Europe
- EAC for Belarus, Kazakhstan, Russia
- GS for Germany
- CM for Morocco
- BSMI for Taiwan region
- BIS for India
- INSM for Moldavia
- KEBS for Kenya
- KUCAS for Kuwait
- KVALITET for Serbia
- NOM for Mexico
- SABS for South Africa
- SASO Saudi Arabia
- SII (general license)
- SONCAP for Nigeria
- STZ for Uzibekistan
- UL for US / Canada
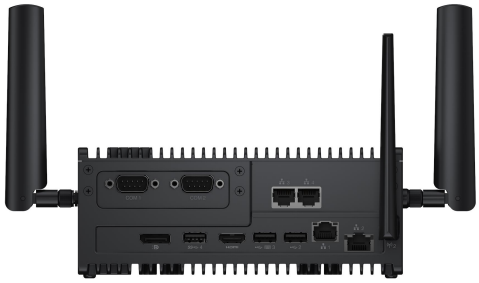
- Feature with ** means that only one option listed under the feature can be configured on selected models. Please refer to the model configuration for specific information.
- Feature with *** means that one or more options listed under the feature can be configured on selected models. Please refer to the model configuration for specific information.
- Lenovo reserves the right to change specifications or other product information without notice. Lenovo is not responsible for photographic or typographical errors. LENOVO PROVIDES THIS PUBLICATION "AS IS", WITHOUT WARRANTY OF ANY KIND, EITHER EXPRESS OR IMPLIED, INCLUDING THE IMPLIED WARRANTIES OF MERCHANTABILITY OR FITNESS FOR A PARTICULAR PURPOSE. Some jurisdictions do not allow disclaimer of express or implied warranties in certain transactions, therefore this disclaimer may not apply to you.
- The specifications on this page may not be available in all regions, and may be changed or updated without notice.